MYTORQ

# EXPLODED VIEW DRAWING & PARTS LIST

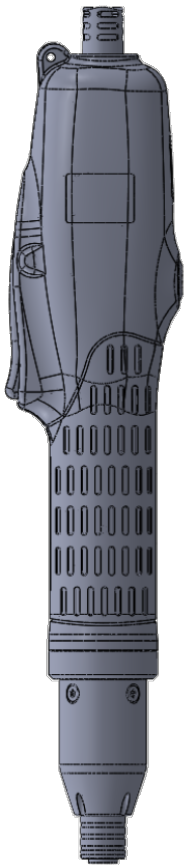

## MY-SAVER 1 mini

## MY-SAVER 3 mini

## MY-SAVER 2.4F mini

**Automatic Non-Carbon-Brush Series**

## SAING EI CORP.

https://www.mytorqtools.com

CE

Y2F212B-9E-005

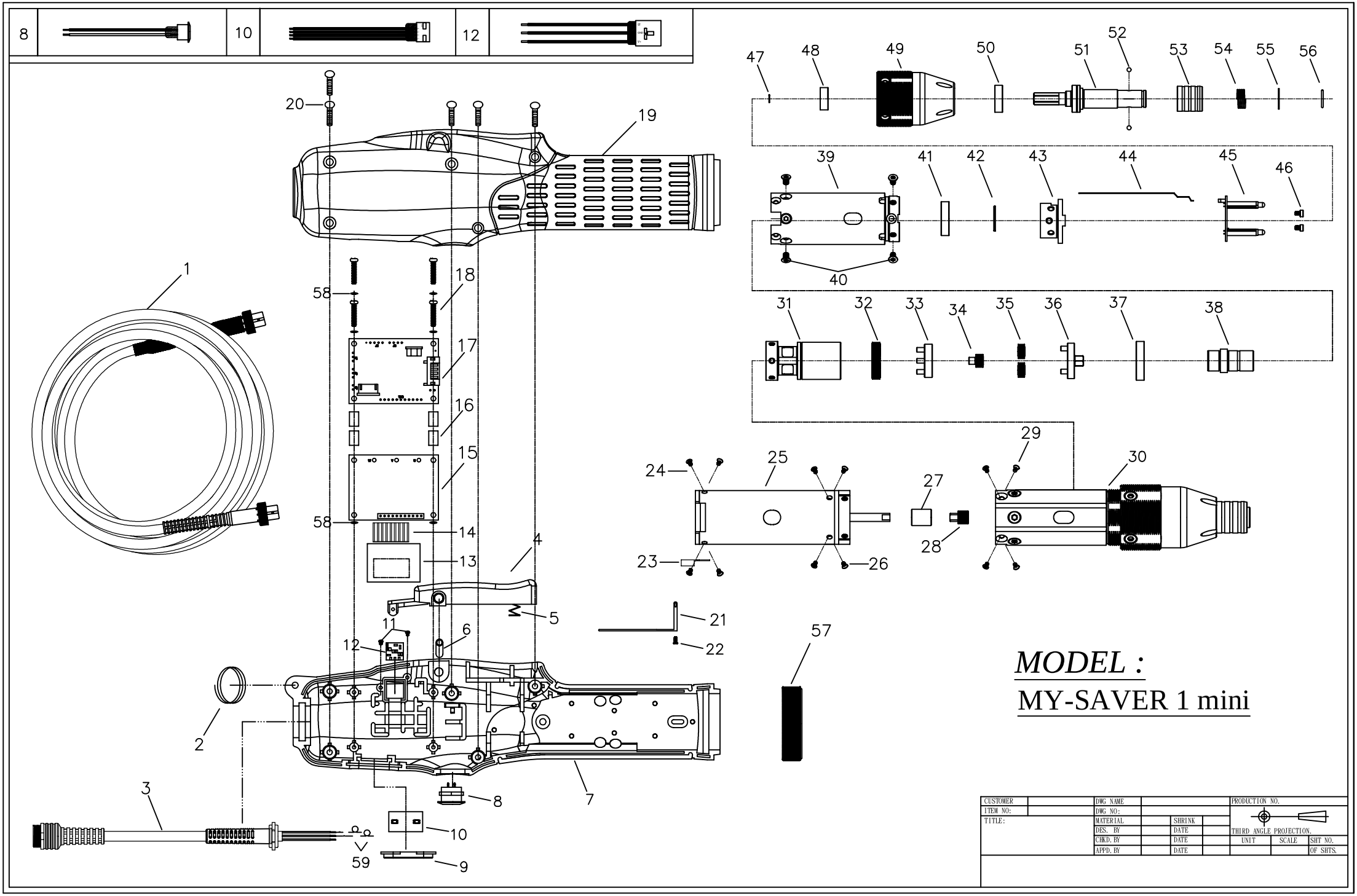
8
10
12
20
19
1
58
18
17
16
15
58
14
13
4
5
11
12
6
2
3
8
7
10
59
9
47
48
49
50
51
52
53
54
55
56
39
41
42
43
44
45
46
40
31
32
33
34
35
36
37
38
29
30
24
25
27
28
23
26
21
22
57
MODEL :
MY-SAVER 1 mini
CUSTOMER
ITEM NO:
TITLE:
DWG NAME
DWG NO:
MATERIAL
SHRINK
DES. BY
DATE
CHKD. BY
DATE
APPD. BY
DATE
PRODUCTION NO.
THIRD ANGLE PROJECTION.
UNIT
SCALE
SHT NO.
OF SHTS.

| NO | PARTS NO | PARTS NAME-E | PARTS NAME-C | Q'ty | NO | PARTS NO | PARTS NAME-E | PARTS NAME-C | Q'ty |
|---|---|---|---|---|---|---|---|---|---|
| 1 | AA50005-B6P-11 | Cord Assembly 3M | 電源線 3M | 1 | 32 | GH92265-6 | Planet Gear | 上游星齒輪 | 3 |
| 2 | CJ20011-4 | Suspension Ring | 起子吊環 | 1 | 33 | G21527-7B | Gear Seat | 上齒盤 | 1 |
| 3 | AA50006-B6P-9N | Cord Assembly 6Pin*180mm | 擋尾電源線 6PIN*180mm | 1 | 34 | G20123-1 | Central Gear | 中心齒 | 1 |
| 4 | CC50023B | Trigger Assembly | 手按開關半成品 | 1 | 35 | GH92265-6 | Planet Gear | 下游星齒輪 | 3 |
| | CC50023-1B | Trigger Assembly-ESD | 手按開關半成品-ESD | 1 | 36 | G21527-6B | Gear Seat | 下齒盤 | 1 |
| 5 | CK28031-1 | Trigger Spring | 壓板彈簧 | 1 | 37 | GN30454 | Bearing | 培林 | 1 |
| 6 | G21208-19B | Pin | 鋼針 | 1 | 38 | GD91432-2 | Shaft | 傳動軸 | 1 |
| 7 | CBB00016-2 | Housing-Underside | 下蓋 | 1 | 39 | G21712-2 | Gear Housing Back cover | 齒輪箱後蓋 | 1 |
| | CBB00016-3 | Housing-Underside-ESD | 下蓋-防靜電 | 1 | 40 | CH20537 | Screw | 螺絲 | 12 |
| 8 | CPB0002 | Switching Element | 開關半成品 | 1 | 41 | G21413-1 | Bearing | 培林 | 1 |
| 9 | EG31457 | Indication light PCB | 訊號燈板 | 1 | 42 | GK20231B | "C" RING | 傳動軸C型扣環 | 1 |
| 10 | C50220 | LED Light Cover (Limpid) | 訊號燈蓋 透明 | 1 | 43 | GP30386-1 | Fixed support of starting light board | 啟動燈板固定座 | 1 |
| 11 | CH30201 | Screw | 螺絲 | 2 | 44 | P11019-7 | FFC Flat Flexible Cable | FFC軟排線 | 1 |
| 12 | EG31420-33 | Start Switch | 啟動開關 | 1 | 45 | EG31553-18 | P.C.B-LED | 機板成品-LED | 1 |
| | EG31420-33-ESD | Start Switch-ESD | 啟動開關-防靜電 | 1 | 46 | CH20506-32 | Screw | 螺絲 | 2 |
| 13 | W50104-7 | Washer | 機板墊片 | 1 | 47 | GK20240-7 | "C" Ring | C型扣環 | 1 |
| 14 | E32201 | Heat Sink | 散熱片 | 1 | 48 | GN30450-1 | Bearing | 培林 | 1 |
| 15 | EG31546B-1 | P.C.B-MOS | 控制機板-下 | 1 | 49 | G21711-6 | Torque Adjust Ring | 前蓋 | 1 |
| 16 | W50119-2 | PC Board Gap Column | 間隔柱 | 4 | 50 | GN30452 | Bearing | 培林 | 1 |
| 17 | EG31550A-1 | P.C.B-MCU | 控制機板-上 | 1 | 51 | KZ-6B-4 | Semi-finished Output axis component-B9.5 | 輸出軸半成品-B9.5 | 1 |
| 18 | CH90141 | Screw | 螺絲 | 4 | | KZ-6D-1 | Semi-finished Output axis component-D | 輸出軸半成品-D | 1 |
| 19 | CAB00016-2 | Housing-Upside | 上蓋 | 1 | | KZ-6C | Semi-finished Output axis component-C | 輸出軸半成品-C | 1 |
| | CAB00016-3 | Housing-Upside-ESD | 上蓋-防靜電 | 1 | 52 | GP21291A | Steel Balls 3mm-D | 鋼珠 3mm-D | 2 |
| 20 | CH20102 | Screw | 外殼螺絲 | 5 | | GP21291B | Steel Balls 2.5mm-C/B/B9.5 | 鋼珠 2.5mm--C/B/B9.5 | 2 |
| 21 | CH30678C | Grounding Means | 接地線 | 1 | 53 | GJJ30478 | Bit Sleeve-B9.5 | 起子頭帽-B9.5 | 1 |
| 22 | CH30193-30 | Screw-M2.5*2mm | 螺絲-M2.5*2mm | 1 | | GJJ30479 | Bit Sleeve-D | 起子頭帽-D | 1 |
| 23 | E30180-1 | Resistance NTC | 熱敏電阻 NTC | 1 | | GJ30461 | Bit Sleeve-C | 起子頭帽-C | 1 |
| 24 | CH20102-24 | Motor Screw | 馬達螺絲-後蓋 | 4 | 54 | GO21352 | Bit Spring-B9.5 | 起子頭帽彈簧-B9.5 | 1 |
| 25 | MO00027CE | Motor Assembly | 馬達成品 | 1 | | GO20391B | Bit Spring-D | 起子頭帽彈簧-D | 1 |
| 26 | CH20504-11 | Motor Screw | 馬達螺絲-前蓋 | 4 | | GO30452 | Bit Spring-C | 起子頭帽彈簧-C | 1 |
| 27 | M20102-1 | GEAR COUPLER | 主齒連接套 | 1 | 55 | G21438 | Spring Washer | 起子頭帽彈簧墊片 | 1 |
| 28 | M11342-2 | GEAR | 馬達主齒 | 1 | 56 | GQ30471 | "C" Ring-C | 頭帽C環-C | 1 |
| 29 | CH20505-17 | Screw | 螺絲 | 4 | | GQ30473 | "C" Ring-D/B9.5 | 頭帽C環-D/B9.5 | 1 |
| 30 | GZTCS00004-2B | Gear Housing-MY-SAVER 1 mini B9.5 | 齒輪箱成品-MY-SAVER 1 mini B9.5 | 1 | 57 | CD91043 | Coupler | 前鎖環 | 1 |
| | GZTCS00004-2D | Gear Housing-MY-SAVER 1 mini D | 齒輪箱成品-MY-SAVER 1 mini D | 1 | 58 | P11020-4 | Insulating Washer-ESD | 絕緣墊片-ESD | 8 |
| | GZTCS00004-2C | Gear Housing-MY-SAVER 1 mini C | 齒輪箱成品-MY-SAVER 1 mini C | 1 | 59 | E31501-50 | Fuse | 保險絲 | 2 |
| 31 | GTC00000007-2 | Torque sensor finish product | 彈性體成品 | 1 | | | | | |

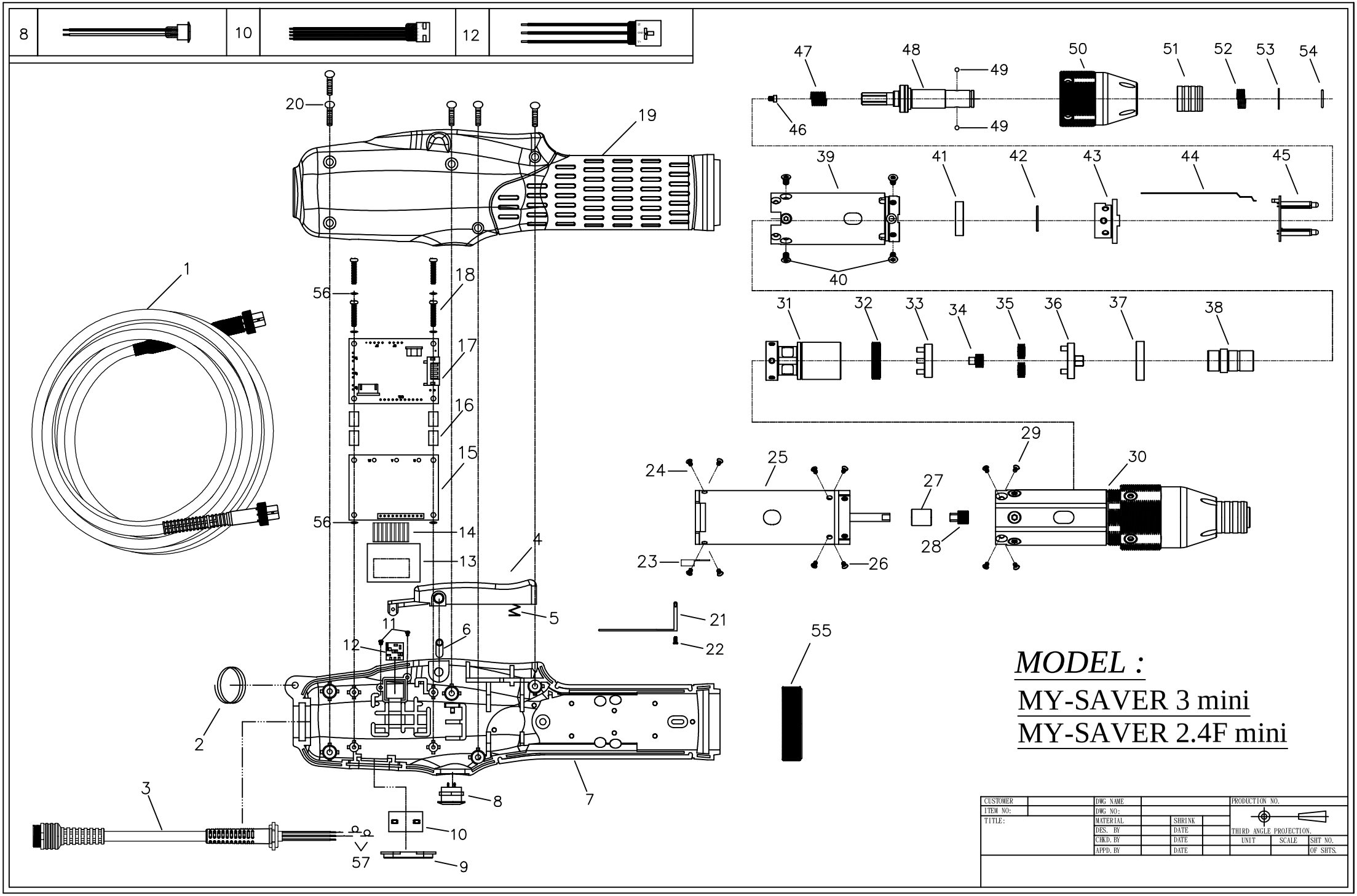
8
10
12
20
19
1
56
18
17
16
15
56
14
13
4
5
11
6
12
2
3
57
8
7
10
9
47
48
49
50
51
52
53
54
46
49
39
41
42
43
44
45
40
31
32
33
34
35
36
37
38
29
30
24
25
27
28
23
26
21
22
55
MODEL :
MY-SAVER 3 mini
MY-SAVER 2.4F mini
CUSTOMER
ITEM NO:
TITLE:
DWG NAME
DWG NO:
MATERIAL
SHRINK
DES. BY
DATE
CHKD. BY
DATE
APPD. BY
DATE
PRODUCTION NO.
THIRD ANGLE PROJECTION.
UNIT
SCALE
SHT NO.
OF SHTS.

| NO | PARTS NO | PARTS NAME-E | PARTS NAME-C | Q'ty | NO | PARTS NO | PARTS NAME-E | PARTS NAME-C | Q'ty |
|---|---|---|---|---|---|---|---|---|---|
| 1 | AA50005-B6P-11 | Cord Assembly 3M | 電源線 3M | 1 | 31 | GTC00000004 | Torque sensor finish product | 彈性體成品 | 1 |
| 2 | CJ20011-4 | Suspension Ring | 起子吊環 | 1 | 32 | GH92265-6 | Planet Gear-MY-SAVER 3 mini | 上游星齒輪-MY-SAVER 3 mini | 3 |
| 3 | AA50006-B6P-9N | Cord Assembly 6Pin*180mm | 擋尾電源線 6PIN*180mm | 1 | | GH92265-9 | Planet Gear-MY-SAVER 2.4F mini | 上游星齒輪-MY-SAVER 2.4F mini | 4 |
| 4 | CC50023B | Trigger Assembly | 手按開關半成品 | 1 | 33 | G21527-7B | Gear Seat-MY-SAVER 3 mini | 上齒盤-MY-SAVER 3 mini | 1 |
| | CC50023-1B | Trigger Assembl-ESD | 手按開關半成品-ESD | 1 | | G21527-11B | Gear Seat-MY-SAVER 2.4F mini | 上齒盤-MY-SAVER 2.4F mini | 1 |
| 5 | CK28031-1 | Trigger Spring | 壓板彈簧 | 1 | 34 | G20123-1 | Central Gear-MY-SAVER 3 mini | 中心齒-MY-SAVER 3 mini | 1 |
| 6 | G21208-19B | Pin | 鋼針 | 1 | | G20123-4 | Central Gear-MY-SAVER 2.4F mini | 中心齒-MY-SAVER 2.4F mini | 1 |
| 7 | CBB00016-2 | Housing-Underside | 下蓋 | 1 | 35 | GH92265-6 | Planet Gear-MY-SAVER 3 mini | 下游星齒輪-MY-SAVER 3 mini | 3 |
| | CBB00016-3 | Housing-Underside-ESD | 下蓋-防靜電 | 1 | | GH92265-9 | Planet Gear-MY-SAVER 2.4F mini | 下游星齒輪-MY-SAVER 2.4F mini | 4 |
| 8 | CPB0002 | Switching Element | 開關半成品 | 1 | 36 | G21527-6B | Gear Seat-MY-SAVER 3 mini | 下齒盤-MY-SAVER 3 mini | 1 |
| 9 | EG31457 | Indication light PCB | 訊號燈板 | 1 | | G21527-12B | Gear Seat-MY-SAVER 2.4F mini | 下齒盤-MY-SAVER 2.4F mini | 1 |
| 10 | C50220 | LED Light Cover (Limpid) | 訊號燈蓋 透明 | 1 | 37 | GN30454 | Bearing | 培林 | 1 |
| 11 | CH30201 | Screw | 螺絲 | 2 | 38 | GD91432-2 | Shaft | 傳動軸 | 1 |
| 12 | EG31420-33 | Start Switch | 啟動開關 | 1 | 39 | G21712-2 | Gear Housing Back cover | 齒輪箱後蓋 | 1 |
| | EG31420-33-ESD | Start Switch-ESD | 啟動開關-防靜電 | 1 | 40 | CH20537 | Screw | 螺絲 | 12 |
| 13 | W50104-7 | Washer | 機板墊片 | 1 | 41 | G21413-1 | Bearing | 培林 | 1 |
| 14 | E32201 | Heat Sink | 散熱片 | 1 | 42 | GK20231B | "C" RING | 傳動軸C型扣環 | 1 |
| 15 | EG31546B-1 | P.C.B-MOS | 控制機板-下 | 1 | 43 | GP30386-1 | Fixed support of starting light board | 啟動燈板固定座 | 1 |
| 16 | W50119-2 | PC Board Gap Column | 間隔柱 | 4 | 44 | P11019-7 | FFC Flat Flexible Cable | FFC軟排線 | 1 |
| 17 | EG31550A-1 | P.C.B-MCU | 控制機板-上 | 1 | 45 | EG31553-16 | P.C.B-LED | 機板成品-LED | 1 |
| 18 | CH90141 | Screw | 螺絲 | 4 | 46 | CH20506-32 | Screw | 螺絲 | 2 |
| 19 | CAB00016-2 | Housing-Upside | 上蓋 | 1 | 47 | CK90053 | Waring Spring | 輸出軸彈簧 | 1 |
| | CAB00016-3 | Housing-Upside-ESD | 上蓋-防靜電 | 1 | 48 | KZ-7B-3 | Semi-finished Output axis component-B | 輸出軸半成品-B | 1 |
| 20 | CH20102 | Screw | 外殼螺絲 | 5 | | KZ-7D | Semi-finished Output axis component-D | 輸出軸半成品-D | 1 |
| 21 | CH30678C | Grounding Means | 接地線 | 1 | | KZ-7B | Semi-finished Output axis component-B9.5 | 輸出軸半成品-B9.5 | 1 |
| 22 | CH30193-30 | Screw-M2.5*2mm | 螺絲-M2.5*2mm | 1 | 49 | GP21291A | Steel Balls 3mm-D | 鋼珠 3mm-D | 2 |
| 23 | E30180-1 | Resistance NTC | 熱敏電阻 NTC | 1 | | GP21291B | Steel Balls 2.5mm-B/B9.5 | 鋼珠 2.5mm-B/B9.5 | 2 |
| 24 | CH20102-24 | Motor Screw | 馬達螺絲-後蓋 | 4 | 50 | G21711-2B | Torque Adjust Ring | 前蓋半成品 | 1 |
| 25 | MO00027CE | Motor Assembly | 馬達成品 | 1 | 51 | GJJ30478 | Bit Sleeve-B/B9.5 | 起子頭帽-B/B9.5 | 1 |
| 26 | CH20504-11 | Motor Screw | 馬達螺絲-前蓋 | 4 | | GJJ30479 | Bit Sleeve-D | 起子頭帽-D | 1 |
| 27 | M20102-1 | GEAR COUPLER | 主齒連接套 | 1 | 52 | GO21352 | Bit Spring-B/B9.5 | 起子頭帽彈簧-B/B9.5 | 1 |
| 28 | M11342-2 | GEAR-MY-SAVER 3 mini | 馬達主齒-MY-SAVER 3 mini | 1 | | GO20391B | Bit Spring-D | 起子頭帽彈簧-D | 1 |
| | M11342-5 | GEAR-MY-SAVER 2.4F mini | 馬達主齒-MY-SAVER 2.4F mini | 1 | 53 | G21438 | Spring Washer-D/B/B9.5 | 起子頭帽彈簧墊片-D/B/B9.5 | 1 |
| 29 | CH20505-17 | Screw | 螺絲 | 4 | 54 | GQ30473 | "C" Ring | 頭帽C環 | 1 |
| 30 | GZTCS00004B | Gear Housing-MY-SAVER 3 mini B | 齒輪箱成品-MY-SAVER 3 mini B | 1 | 55 | CD91043 | Coupler | 前鎖環 | 1 |
| | GZTCS00004D | Gear Housing-MY-SAVER 3 mini D | 齒輪箱成品-MY-SAVER 3 mini D | 1 | 56 | P11020-4 | Insulating Washe-ESD | 絕緣墊片-ESD | 8 |
| | GZTCS00004-1B | Gear Housing-MY-SAVER 3 mini B9.5 | 齒輪箱成品-MY-SAVER 3 mini B9.5 | 1 | 57 | E31501-50 | Fuse | 保險絲 | 2 |
| | GZTCS00004-3FB | Gear Housing-MY-SAVER 2.4F mini B9.5 | 齒輪箱成品-MY-SAVER 2.4F mini B9.5 | 1 | | | | | |

**Our company reserves the right to modify**

**the product without prior notice.**